FC Series

Free Cooling Module

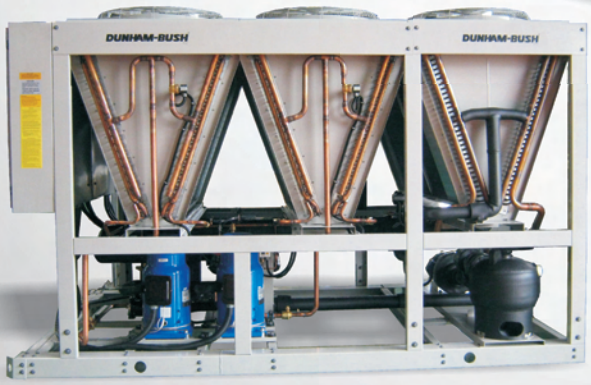

DUNHAM-BUSH®

Products that perform...By people who care

FREE COOLING MODULE

CONCEPT

Free cooling is an economical method of using low external air temperatures to assist in chilling water, which can then be used for air conditioning systems. It is the production of chilled water without the use of a chiller and can be used generally in the late fall, winter and early spring.

When the ambient air temperature drops to a set temperature, a modulating valve allows all or part of the chilled water to by-pass an existing chiller and run through the Free Cooling system, which uses less power and uses the lower ambient air temperature to cool the water in the system

OPERATION

Ambient Temperature above 40°F

When the process return water temperature required is equal to or higher than the ambient air temperature Free Cooling is not suitable. The system's three way valve will continue to direct the fluid flow through the chillers' compressors to be cooled to the required set point temperature.

Mid Ambient (Between 15°F to 40°F)

The water is partially cooled by the compressor and partially by the ambient temperatures. The percentage of Free Cooling achieved is dependent on seasonal temperatures although partial Free Cooling commences when the ambient air temperature reached 32°F. The water is partially cooled through the Free Cooler then flows through the chillers' compressors to achieve the required set point temperature.

Low Ambient (Below 15°F)

When outdoor temperatures are low enough, the water is chilled solely by the Free Cooling coil. This allows the chiller's compressors to stop operating, saving significant amounts of energy. The only electrical power used in winter operation is for fan operation.

Notes: The operating sequence above serves as a general guideline only. The ambient temperature for free cooling to commence can be reset by user.

FREE COOLER STANDARD FEATURE

Standard features include:

- Free cooling coil consist of copper tubes with enhanced aluminium fins
- Direct driven fans with internal motor protection
- Unit constructed of heavy gauge galvanized steel with oven baked epoxy / polyester powder paint
- Free cooling module could be mounted with chiller or come as an independent unit depending on the model and capacity required.
- DB Director full function Windows based microcomputer controller for chiller with free cooling module.

Optional items:

- Single or dual hydraulic pump
- 3 way modulating valve

BENEFITS

- Reducing electricity consumption
- Environmental friendly way to produce chilled water

DIMENSIONAL DATA

TYPICAL AIR COOLED CHILLER COME WITH FREE COOLING ON SAME SKID

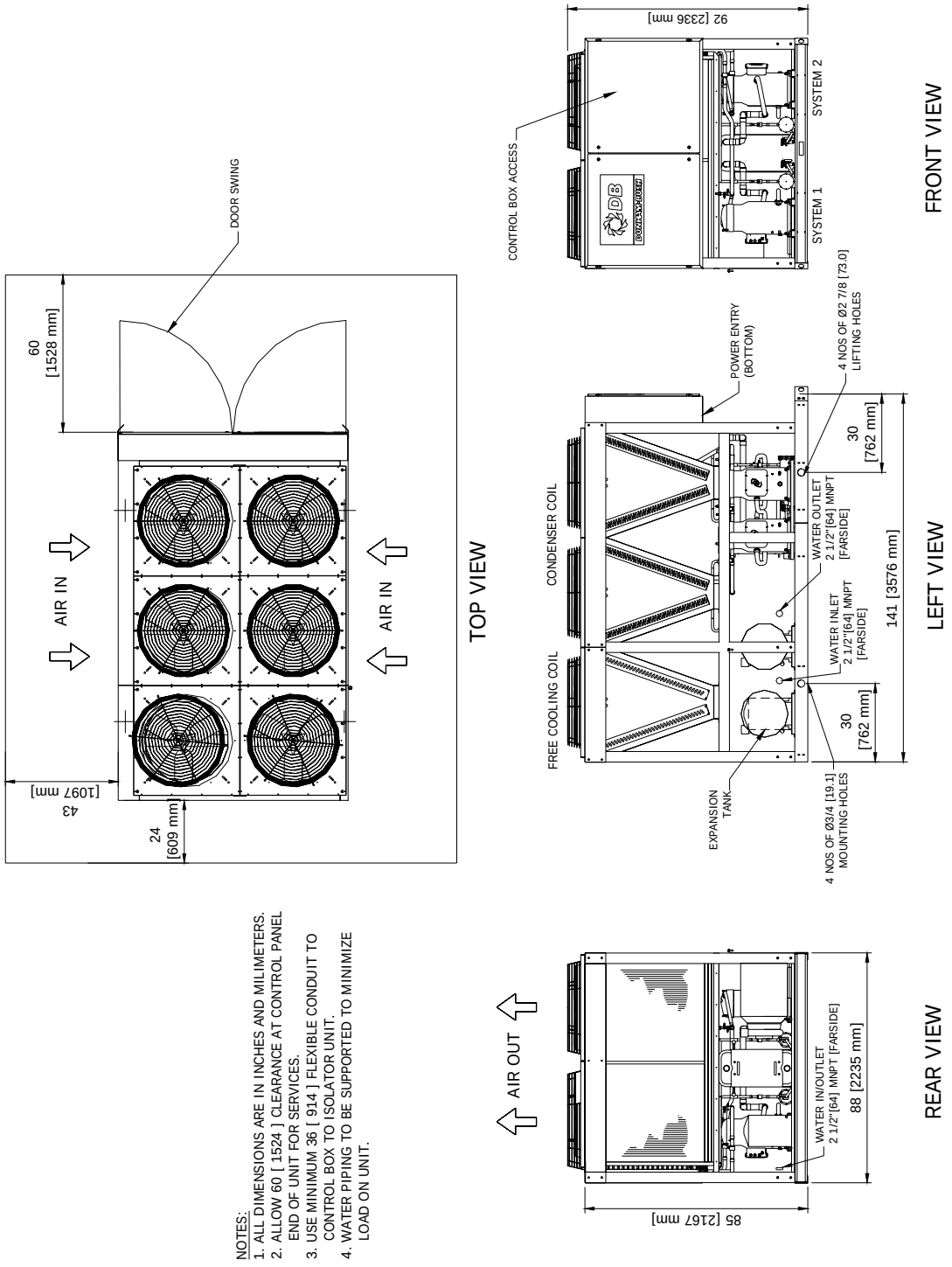

Note: All dimensions are in inches[mm].

DIMENSIONAL DATA

TYPICAL FREE COOLING MODULE ON SEPARATE SKID

1a.) Chiller

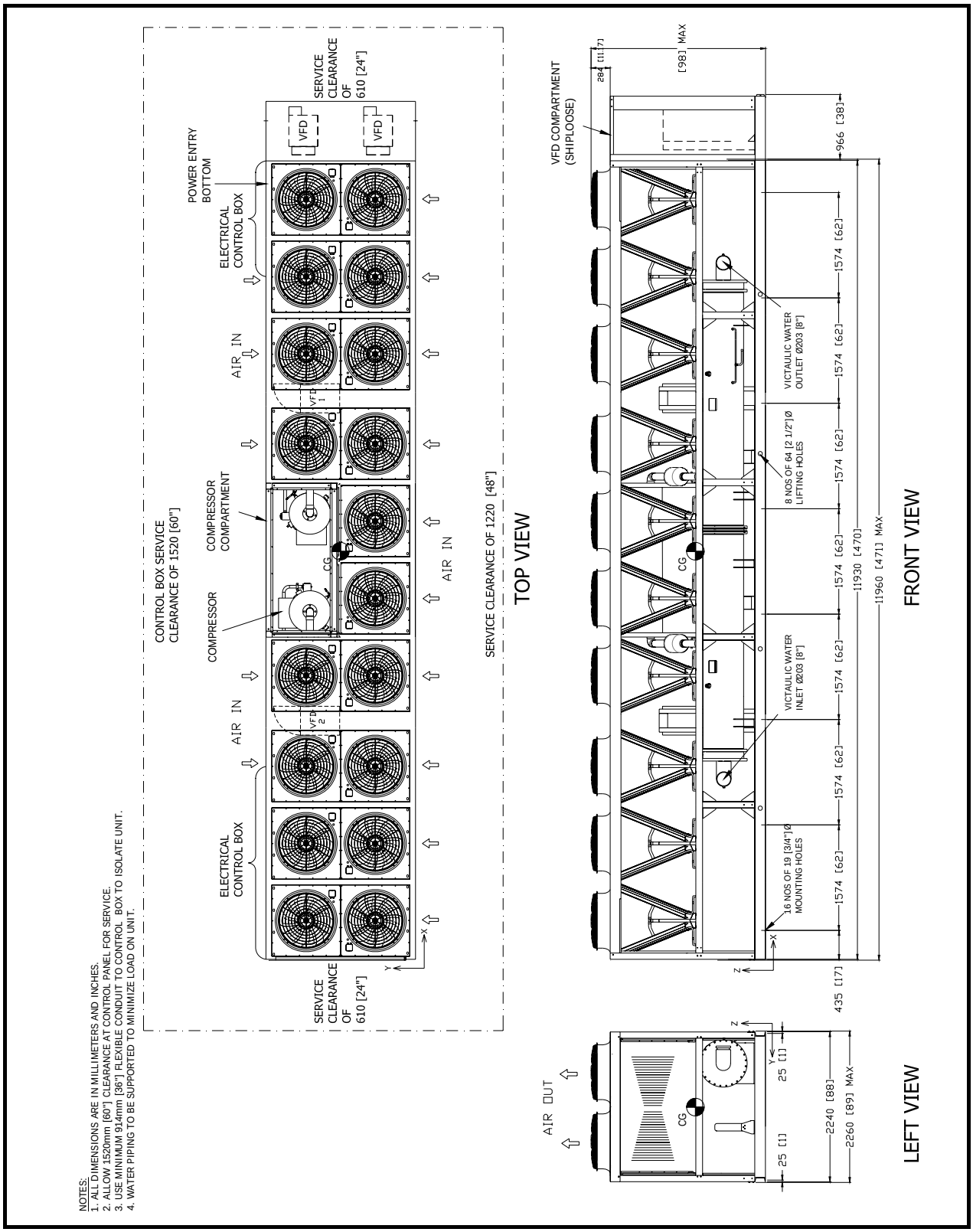

Note: All dimensions are in inches[mm].

DIMENSIONAL DATA

1b.) Free Cooling

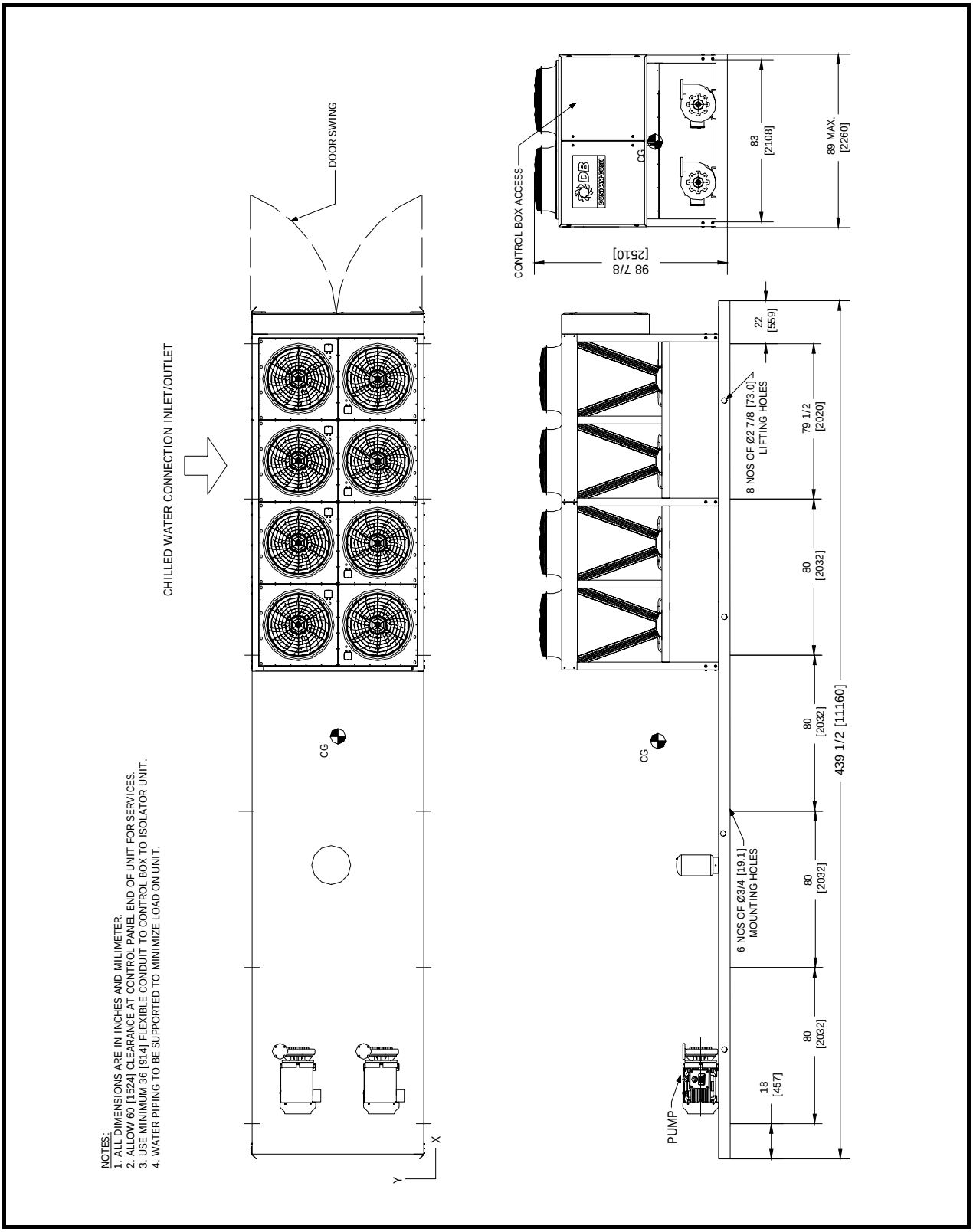

Note: All dimensions are in inches[mm].

TYPICAL PIPING SCHEMATIC

TYPICAL AIR COOLED CHILLER COME WITH FREE COOLING ON SAME SKID

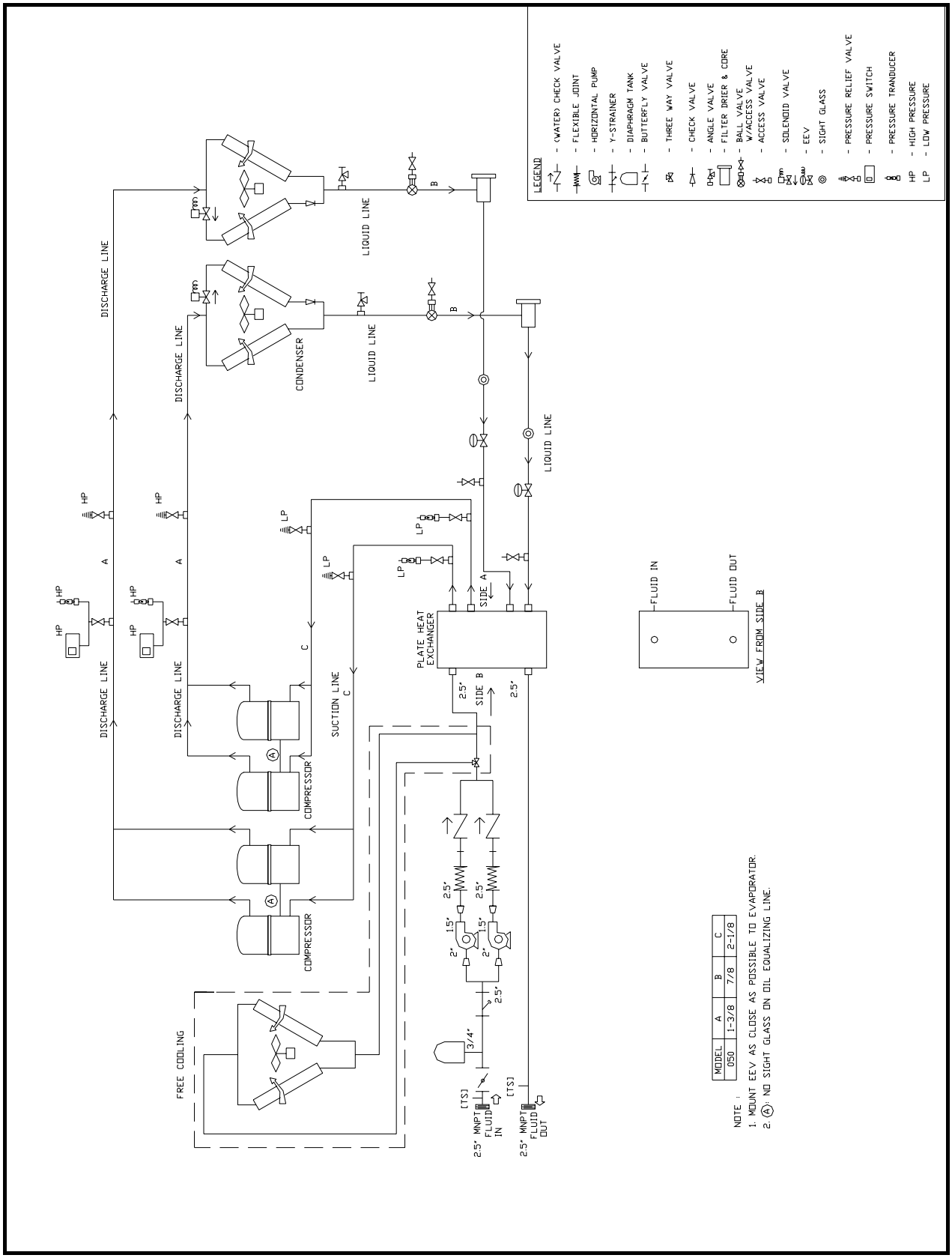

TYPICAL PIPING SCHEMATIC

FREE COOLING MODULE ON SEPARATE SKID

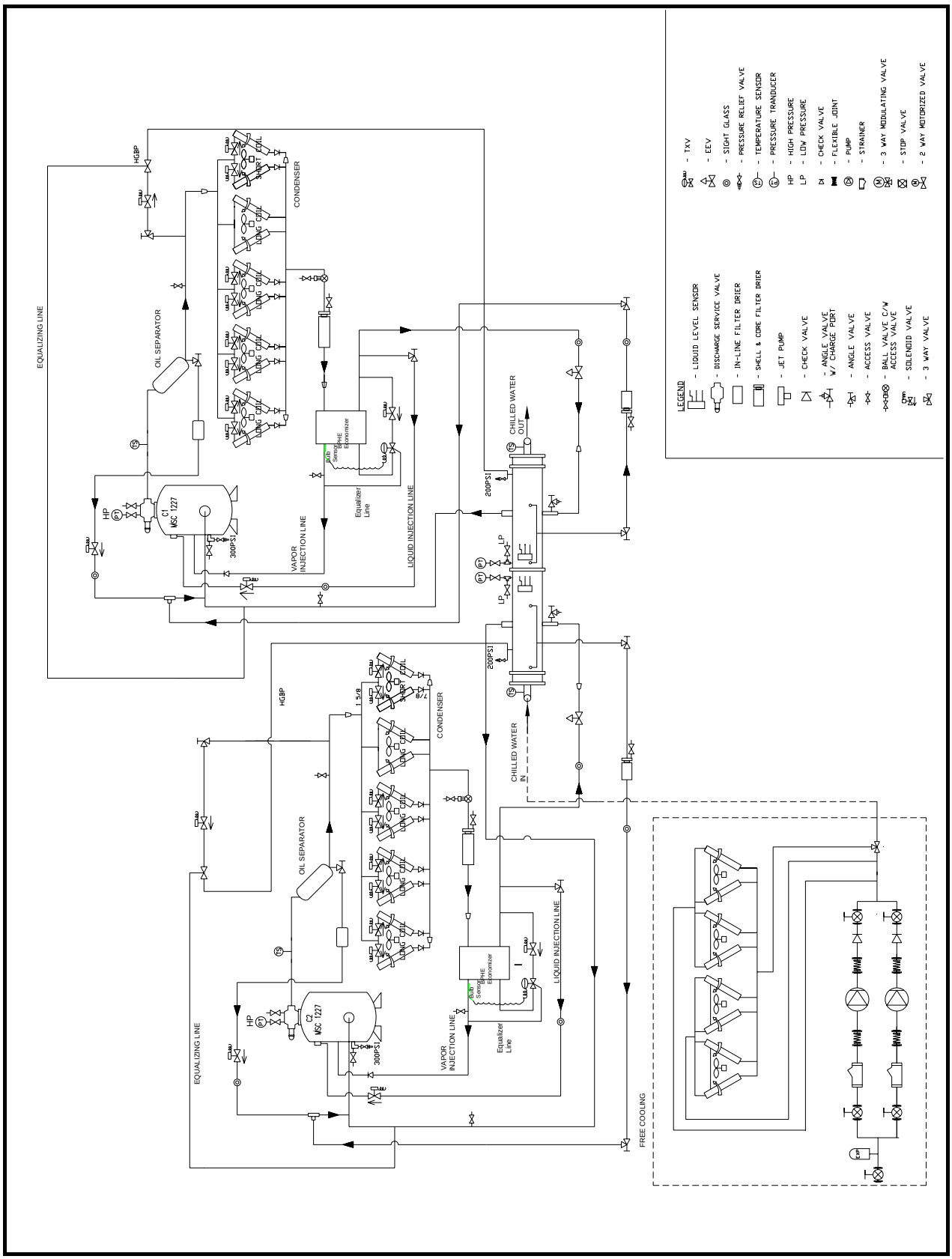

Malaysia

Lot 5755-6,
Kidamai Industrial Park,
Bukit Angkat,
43000 Kajang,
Selangor, Malaysia

Tel: +603-8924 9000
Fax: +603-8739 5020

China

No. 1 Dunham-Bush Road,
Laishan District,
Yantai,
Shandong Province,
China 264003

Tel: +86-535-739 7888
Fax: +86-535-739 7999

United Kingdom

8 Downley Road,
Havant,
Hampshire,
England PO9 2JD

Tel : +44-23-9247 7700
Fax: +44-23-9245 0396

United States of America

2125 NW 86th Ave
Doral, Florida 33122
United States of America

Tel: +305-883-0655
Fax: +786-527-3539

United Arab Emirates

Office # 2606,
Fortune Executive Towers,
Cluster T1, Jumeirah Lake Tower
Dubai, UAE

Tel: +971-4-443 9207
Fax: +971-4-443 9208

South Africa

No. 57 Sovereign Drive
Route 21 Corporate Park
Irene, Pretoria
South Africa

Tel: +27-12-345 4202
Fax: +27-12-345 4203

Singapore

2 Kallang Pudding Road
#07-07 Mactech Building
Singapore 349307

Tel: +65-6842 2012
Fax: +65-6842 2013

Indonesia

The Vida Building 7th Floor
Jl. Raya Pejuangan
No. 8 Kebon Jeruk
Jakarta 11530, Indonesia

Tel: +62-21-2977 8100
Fax: +62-21-2977 8001

Thailand

1 QHouse Lumpini,
27th Floor, South Sathorn Road,
Tungmahamek, Sathorn,
Bangkok Thailand 10120

Tel: +66-0-2610 3749
Fax: +66-0-2610 3601

Vietnam

10th Floor, Nam A Bank Tower,
201-203 Cach Mang Thang 8 Street,
District 3, Ho Chi Minh City,
Vietnam

Tel: +84-8-6290 3108
Fax: +84-8-6290 3109

DUNHAM-BUSH®

info@dunham-bush.com
www.dunham-bush.com

Products that perform...By people who care

Manufacturer reserves the right to change specifications without prior notice.